Low Power Single Operational Amplifiers

General Description

The LM321 series consists high gain, internally frequency compensated operational amplifiers which were designed specifically to operate from a single power supply over a wide range of voltages. Operation from split power supplies is also possible and the low power supply current drain is independent of the magnitude of the power supply voltage.

Application areas include transducer amplifiers, dc gain blocks and all the conventional op amp circuits which now can be more easily implemented in single power supply systems. For example, the LM321 series can be directly operated from the standard +5V power supply voltage which is used in digital systems and will easily provide the required interface electronics without requiring an additional ±15V power supply. The LM321 amplifier available in micro-sized packaging, such as the standard packages including SOT235.

Ordering Information

Part Number	Marking	Package
LM321_235	A63A	SOT235

Features

- Internally frequency compensated for unity gain
- Large dc voltage gain: 100 dB
- Very low supply current drain (100µA)
- Wide bandwidth (unity gain): 1MHz
- Low input offset voltage: 3mV
- Wide power supply range:
  Single supply: 3V to 32V
  Dual supplies: ±1.5V to ±16V
- Input common-mode voltage range includes ground
- Differential input voltage range equal to the power supply voltage
- SOT235 Packages

Applications

- Merchant network and server power supply units
- Multi-function printers
- Power supplies and mobile chargers
- Motor control: AC induction, brushed DC, brushless DC, high-voltage, low-voltage, permanent magnet, and stepper motor
- Desktop PC and motherboard
- Indoor and outdoor air conditioners
- Washers, dryers, and refrigerators
- AC inverters, string inverters, central inverters, and voltage frequency drives
- Uninterruptible power supplies
- Electronic point-of-sale systems

Pin Configuration

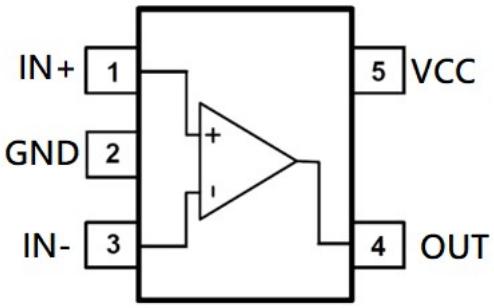

Pin Assignment

Pin Name	SOT235 Pin No	Pin Function
IN1+	1	Non-inverting Input
GND	2	Ground
IN1-	3	Inverting Input
OUT	4	Output
VCC	5	Supply Voltage

Function Block Diagram

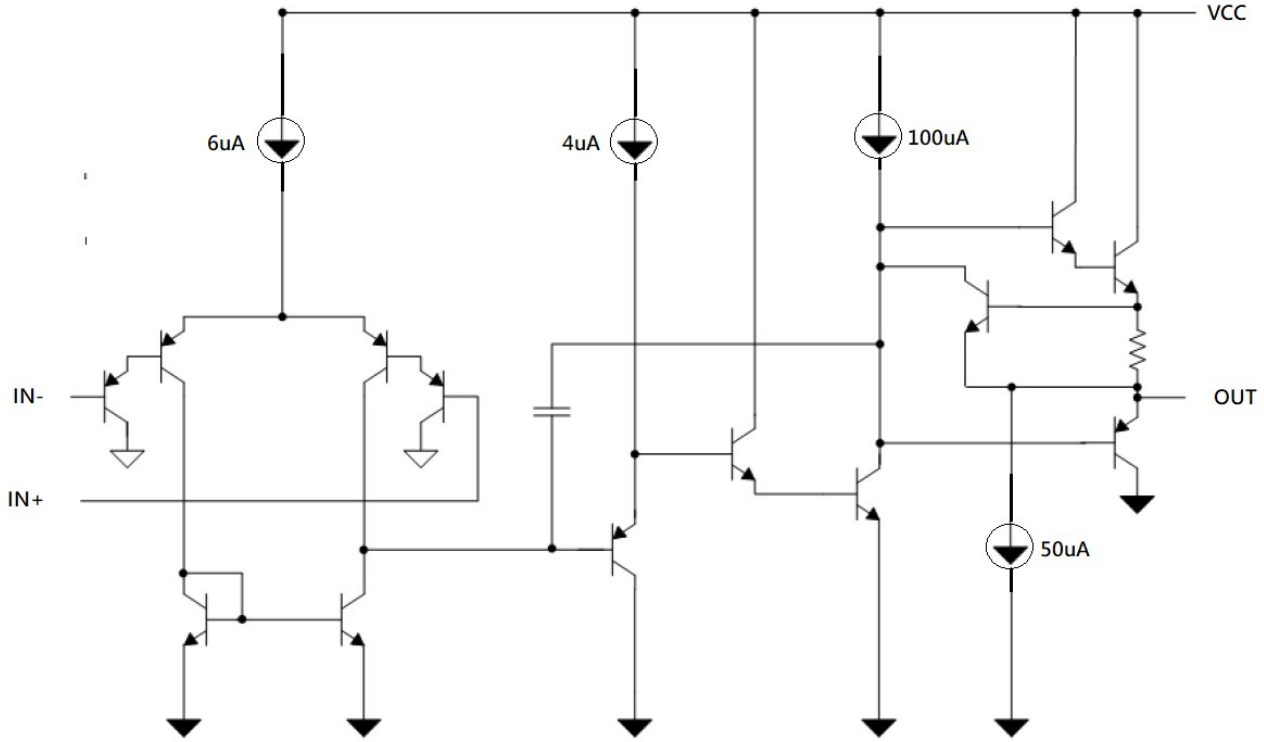

Absolute Maximum Ratings (Note1)

- Supply Voltage $V_{Supply} = V_{CC} - GND$ ---------- 35V
- Differential Input Voltage, V_{ID} ---------- ±35V
- Input Voltage V_{IN+}, V_{IN-}, ---------- -0.3V to 35V
- Power Dissipation, PD@T_A=25℃, SOT-235----------0.4W
- Thermal Resistance, θ_{JA}, SOT-235----------250℃/W
- Junction Temperature---------- -40°C to125°C
- Lead Temperature (Soldering, 10 sec.)---------- 300°C
- Storage Temperature ---------- –65°C to 150°C

Recommended Operating Conditions

- Supply Voltage $V_{Supply} = V_{CC} - GND$ ---------- 32V
- Differential Input Voltage, V_{ID} ---------- ±32V
- Input Voltage V_{IN1+}, V_{IN1-} ---------- 32V

- Junction Temperature ---------- -40°C to 125°C
- Ambient Temperature ---------- -40°C to 85°C

Electrical Characteristics

V_{CC}=5V, T_A=25℃, unless otherwise specified

PARAMETER	SYMBOL	TEST Conditions		MIN	TYP	MAX	UNIT
Output Voltage Swing	V_{OH}	VDD=30V	RL=2kΩ	26	--	--	V
			RL=10kΩ	27	28	--	V
	V_{OL}	VDD=5V, RL=10kΩ		--	5	20	mV
Input Offset Voltage	V_{OS}	*4		--	2	5	mV
Input Bias Current	I_B	IIN(+) or IIN(-), VCM=0V, *6		--	45	150	nA
Input Offset Current	I_{OS}	IIN(+) - IIN(-), VCM=0V		--	3	30	nA
Common-Mode Voltage Range	V_{CM}	VDD=30V, *6		0	--	VDD-1.5	V
Supply Current	Over Full Temperature Range, R_L=∞ on all Op Amps		VDD=30V	--	160	500	uA
			VDD=5V	--	100	300	uA
Large Signal Voltage Gain	VDD=15V,RL≥2kΩ(for Vo=1~11V)			50	100	--	V/mV
Common-Mode Rejection Ratio	CMRR	VCM=0~ VDD-1.5V		70	90	--	dB
Power-Supply Rejection Ratio	PSRR	VDD = 5V to 30V		75	100	--	dB
Amplifier-to-Amplifier Coupling	A_V	f=1 ～ 20kHz(input referred) *7		--	-120	--	dB
Output Current	Source	VIN(+)=1V, VIN(-)=0V, VDD=15V, Vo=2V		20	40	--	mV
	Sink	VIN(-)=1V, VIN(+)=0V, VDD=15V, Vo=2V		--	15	--	mV
		VIN(-)=1V, VIN(+)=0V, VDD=15V, Vo=200mV		--	50	--	uV
Output Short-Circuit Current	I_{SC}	VDD=15V, *2		--	40	85	mA

Typical Characteristics

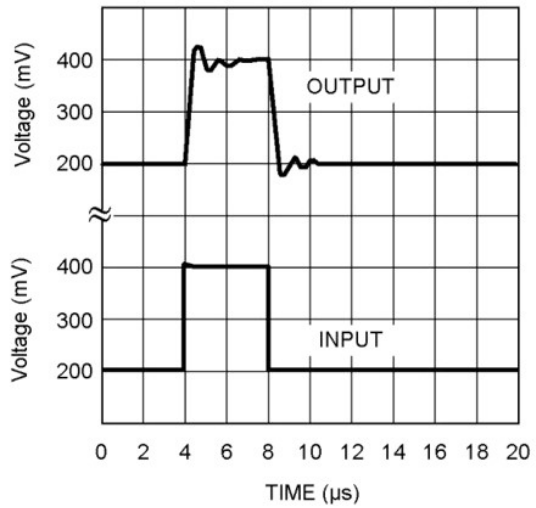

Figure 1. Small Signal Pulse Response

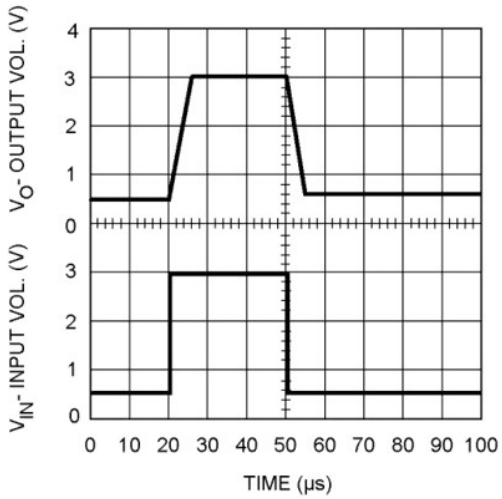

Figure 2. Large Signal Pulse Response

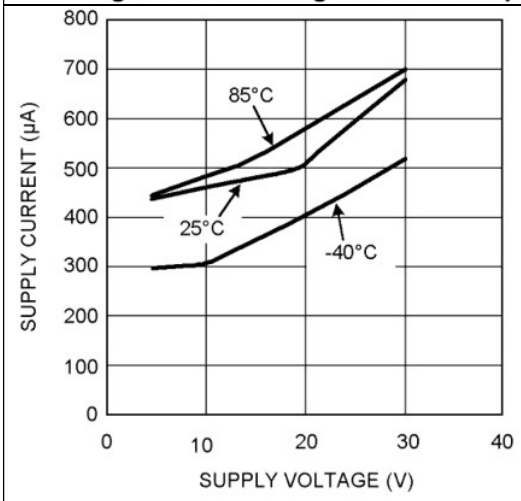

Figure 3. Supply Current vs. Supply Voltage

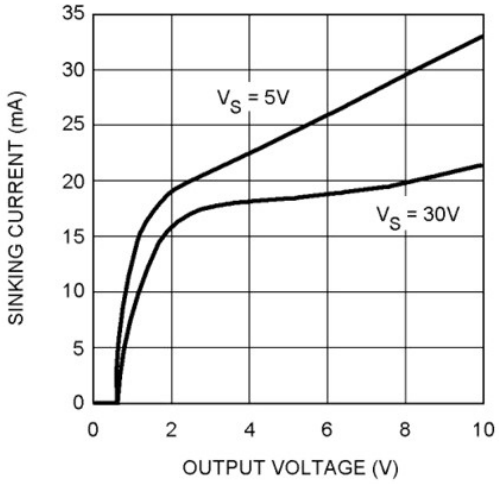

Figure 4. Sinking Current vs Output Voltage

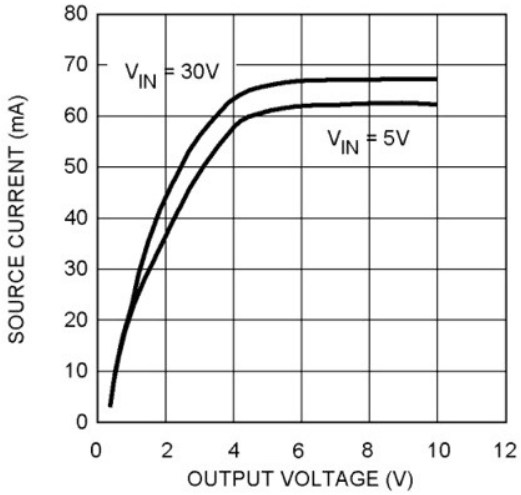

Figure 5. Source Current vs. Output Voltage

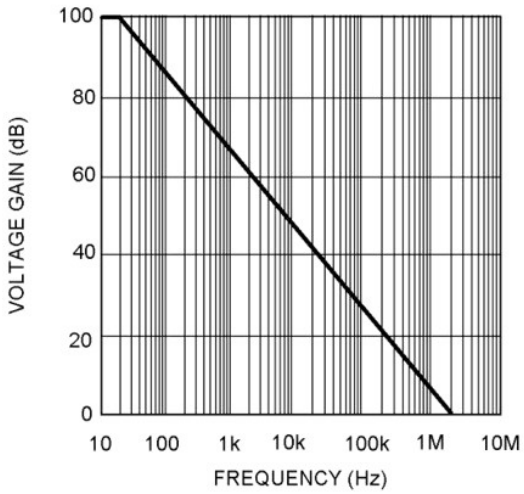

Figure 6. Open Loop Frequency Response

IC Operation Information

Overview

These devices consist of high-gain frequency-compensated operational amplifiers designed to operate from a single supply over a wide range of voltages. Operation from split supplies also is possible if the difference between the two supplies is within the supply voltage range specified in Recommended Operating Conditions and VS is at least 1.5 V more positive than the input common-mode voltage. The low supply-current drain is independent of the magnitude of the supply voltage.

Applications include transducer amplifiers, dc amplification blocks, and all the conventional operational amplifier circuits that now can be implemented more easily in single-supply-voltage systems. For example, these devices can be operated directly from the standard 5-V supply used in digital systems and easily can provide the

required interface electronics without additional ±5-V supplies.

Unity Gain Bandwidth

The unity-gain bandwidth is the frequency up to which an amplifier with a unity gain may be operated without greatly distorting the signal. These devices have a 1MHz unity-gain bandwidth.

Slew Rate

The slew rate is the rate at which an operational amplifier can change its output when there is a change on the input. These devices have a 0.7-V/µs slew rate.

Input Common Mode Range

The valid common-mode range is from device ground to V_S – 1.5 V (V_S – 2 V across temperature). Inputs may exceed V_S up to the maximum V_S without device damage. At least one input must be in the valid input common-mode range for the output to be the correct phase. If both inputs exceed the valid range, then the output phase is undefined. If either input more than 0.3 V below GND then input current should be limited to 1 mA and the output phase is undefined.

Device Functional Modes

These devices are powered on when the supply is connected. This device can be operated as a single-supply operational amplifier or dual-supply amplifier, depending on the application.

IC Application Information

The LM321 operational amplifiers are useful in a wide range of signal conditioning applications. Inputs can be powered before V_S for flexibility in multiple supply circuits. A typical application for an operational amplifier is an inverting amplifier. This amplifier takes a positive voltage on the input, and makes it a negative voltage of the same magnitude. In the same manner, it also makes negative voltages positive.

The supply voltage must be chosen such that it is larger than the input voltage range and output range. For instance, this application scales a signal of ±0.5 V to ±1.8 V. Setting the supply at ±12 V is sufficient to accommodate this application.

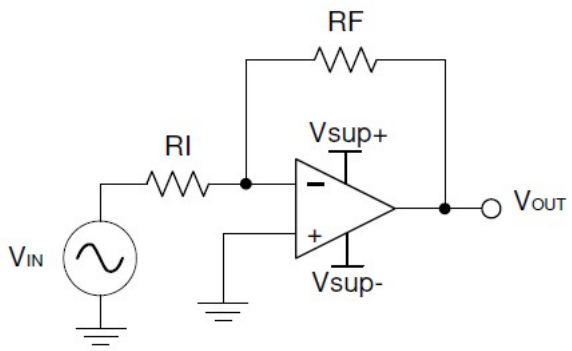

Power Supply Recommendations

Place 0.1-µF bypass capacitors close to the power-supply pins to reduce errors coupling in from noisy or high-impedance power supplies.

Layout Guidelines

For best operational performance of the device, use good PCB layout practices, including:

- Noise can propagate into analog circuitry through the power pins of the circuit as a whole, as well as the operational amplifier. Bypass capacitors are used to reduce the coupled noise by providing low-impedance power sources local to the analog circuitry.

– Connect low-ESR, 0.1-µF ceramic bypass capacitors between each supply pin and ground, placed as close to the device as possible. A single bypass capacitor from V+ to ground is applicable for single supply applications.

• Separate grounding for analog and digital portions of circuitry is one of the simplest and most-effective methods of noise suppression. One or more layers on multilayer PCBs are usually devoted to ground planes. A ground plane helps distribute heat and reduces EMI noise pickup. Make sure to physically separate digital and analog grounds, paying attention to the flow of the ground current.

• To reduce parasitic coupling, run the input traces as far away from the supply or output traces as possible. If it is not possible to keep them separate, it is much better to cross the sensitive trace perpendicular as opposed to in parallel with the noisy trace.

• Place the external components as close to the device as possible. Keeping RF and RG close to the inverting input minimizes parasitic capacitance, as shown in Layout Examples.

• Keep the length of input traces as short as possible. Always remember that the input traces are the most sensitive part of the circuit.

• Consider a driven, low-impedance guard ring around the critical traces. A guard ring can significantly reduce leakage currents from nearby traces that are at different potentials.

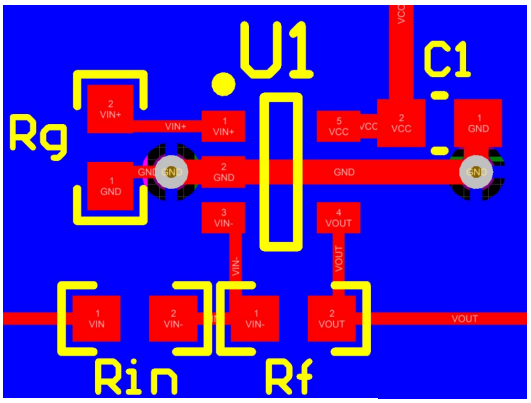

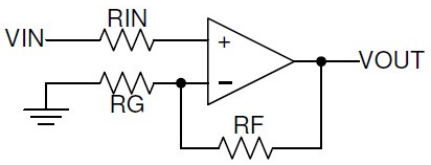

Package Information
SOT235

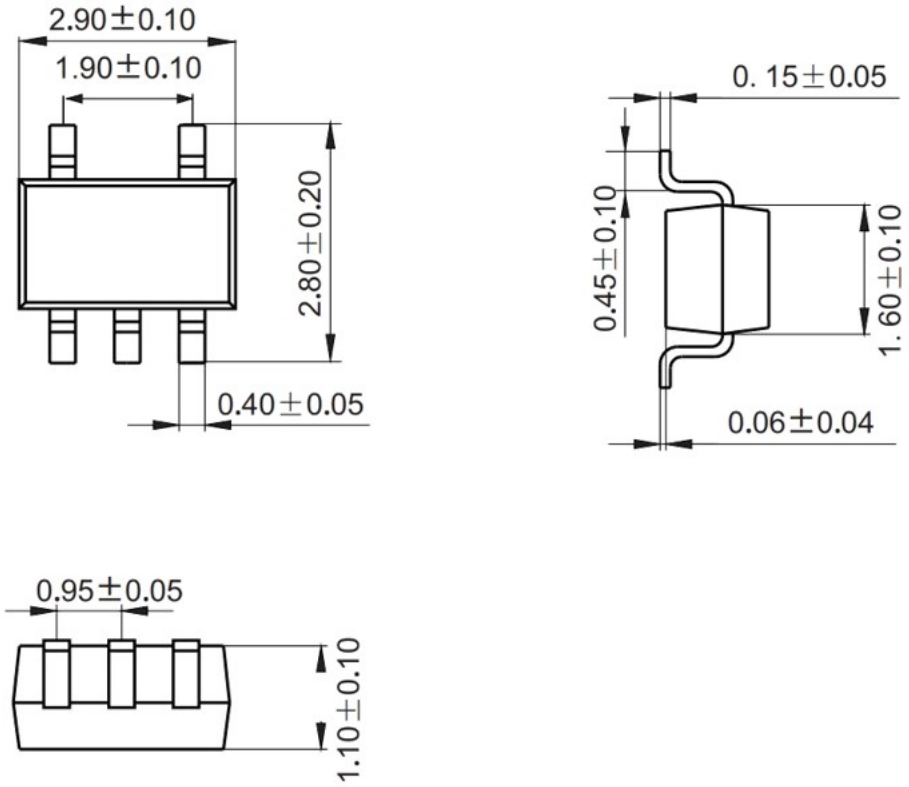
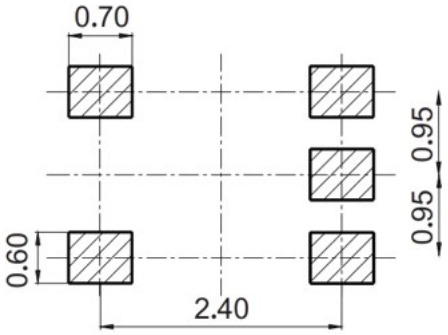
Mounting Pad Layout (Unit: mm)